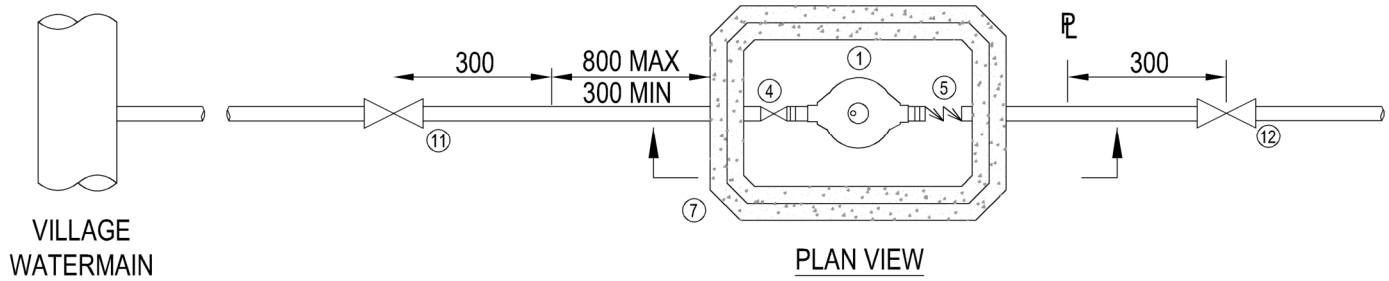

PLAN VIEW

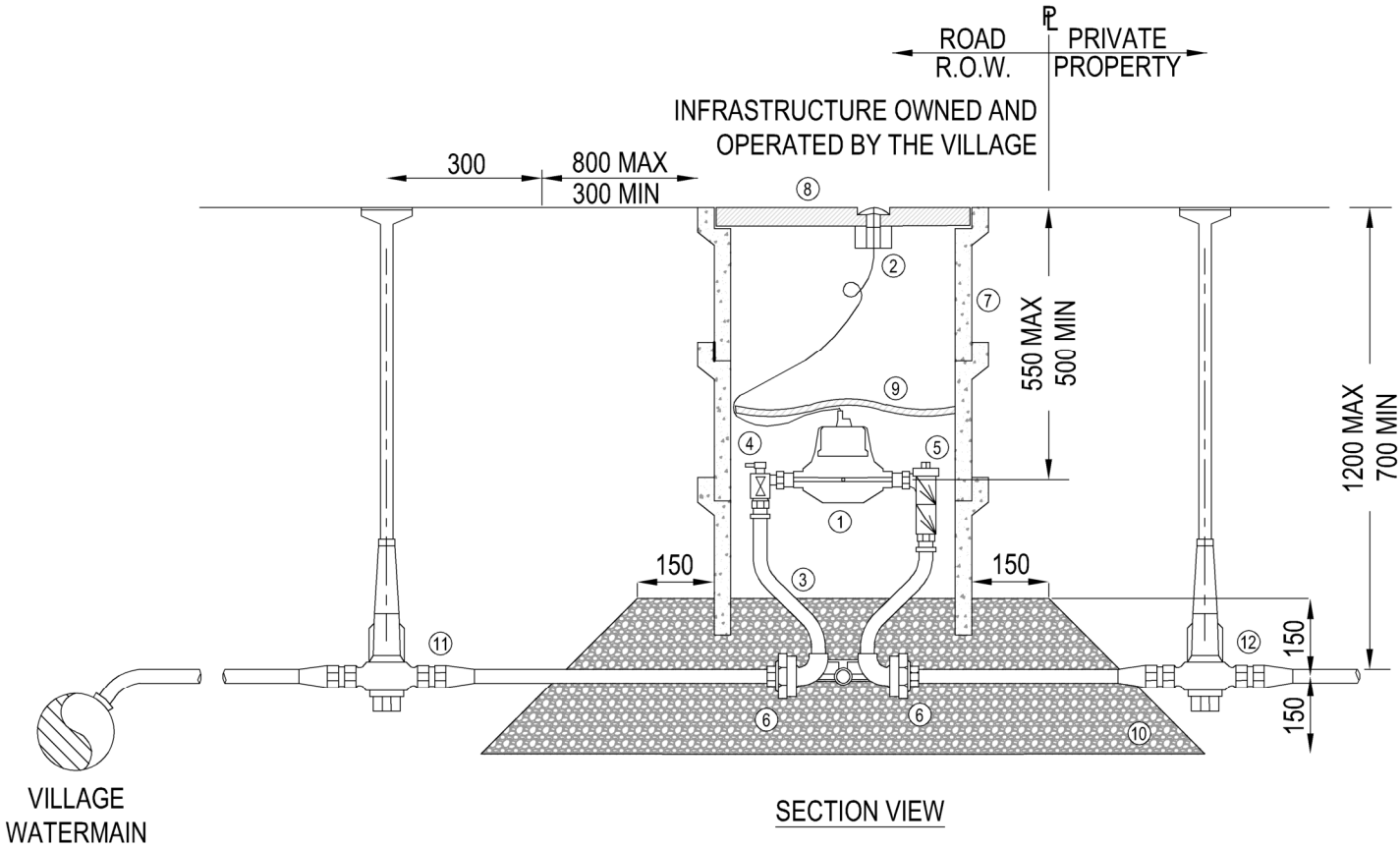

SECTION VIEW

NOTES:

1. MINIMUM 1.0m HORIZONTAL AND 2.0m VERTICAL CLEARANCE AROUND METER BOX TO REMAIN FREE OF LANDSCAPING OR OTHER OBSTRUCTIONS.
2. ALL DIMENSIONS SHOWN IN MILLIMETERS UNLESS OTHERWISE NOTED.

ITEM	DESCRIPTION	ITEM	DESCRIPTION
1	WATER METER (AS PER APPROVED METER PRODUCTS LIST)	7	16-38 mm WM - TYPE 66 50 mm WM - TYPE 67
2	REMOTE RECEPTACLE	8	CAST IRON LID (C/W RECESSED HOLE FOR REMOTE RECEPTACLE)
3	METER SETTER	9	FOIL BUBBLE WRAP INSULATION BLANKET (CUT TO FIT METER BOX OPENING)
4	INLET BALL VALVE - FULL PORT (PART OF SETTER)	10	19mm CLEAR CRUSHED DRAIN ROCK (PLACED INSIDE BOX TO STABILIZE SETTER)
5	DUAL CHECK VALVE (PART OF SETTER)	11	CURB STOP C/W RISER
6	COMPRESSION FITTINGS (PART OF SETTER)	12	CURB STOP C/W RISER

VILLAGE OF ANMORE

INSTALLATION DETAIL FOR 16mm TO 50mm WATER SERVICE AND METER

REV A - DEC 2020

APPROVED BY - C BOIT, P.ENG

DATE - DECEMBER 2020

DRAWING NUMBER:

VoA_W01